Benefits and features

- **Made in short lengths**
- **Light press fit**
- **Pressurizing is carried out with an allen T-wrench**

ETP HYDRO-GRIP® AI

Sleeve for **permanent tool assembly.** Made in short lengths to allow for a light press fit. Heat up the tool before mounting. The tool and HYDRO-GRIP should be bolted together. Pressurizing is carried out with an allen T-wrench.

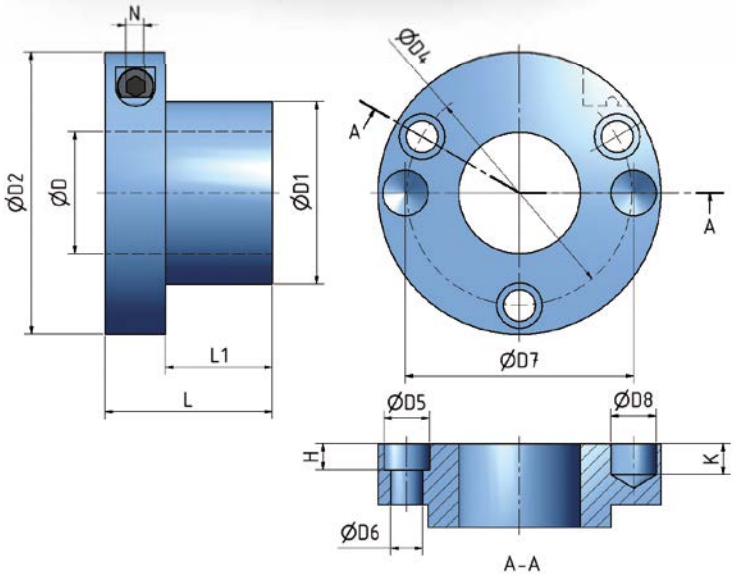

Technical specification ETP HYDRO-GRIP® AI

Type	D	D1	D2	D4	D5	D6	D7	D8	H	K	L	L1	N
AI-40/50-55	40	50	83	64	10	6	65	15	5.5	10	55	35	6
AI-40/60-55	40	60	93	74	14	9.5	75	15	8.5	10	55	35	6
AI-50/60-55*	50	60	93	74	14	9.5	75	15	8.5	10	55	35	6
AI-50/60-75*	50	60	93	74	14	9.5	75	15	8.5	10	75	55	6
AI-50/65-75*	50	65	98	80	14	9.5	80	15	8.5	10	75	55	6
AI-1 1/4”/40-55**	1 1/4”	40	83	55	14	9.5	55	15	8.5	10	55	35	6
AI-1 1/2”/50-55	1 1/2”	50	93	64	14	9.5	65	15	8.5	10	55	35	6
AI-1 13/16”/60-55	1 13/16”	60	93	74	14	9.5	75	15	8.5	10	55	35	6
AI-2 1/8”/65-55	2 1/8”	65	98	80	14	9.5	80	15	8.5	10	55	35	6

*) The AI Ø50 has two, threaded M8 holes for carrier pegs, on a 70 mm pitch diameter.
**) The AI-1 1/4”/40 has two tool fastening holes.
See section Technical Specification for more information.